KNOW YOUR PARKS & FACILITIES

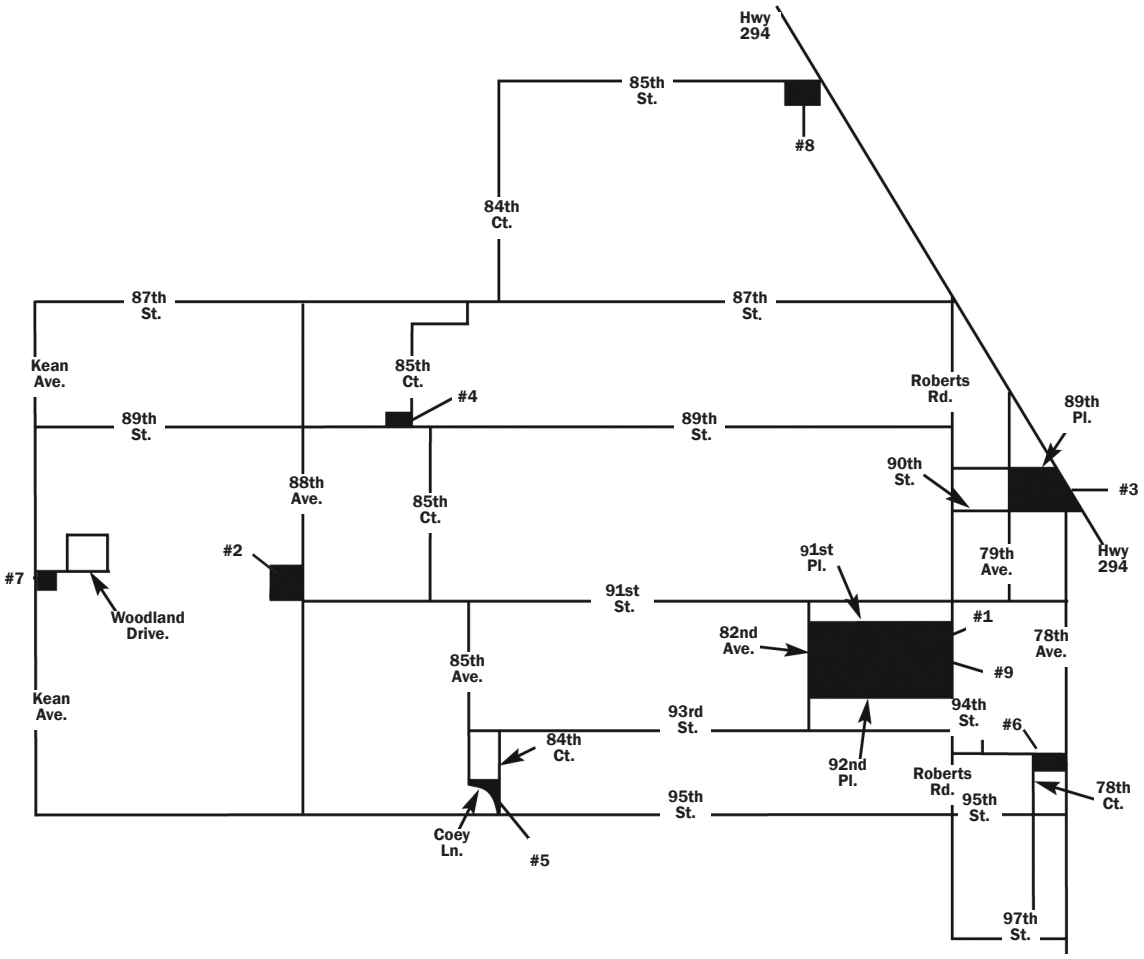

	Administrative Office	Basketball Court (Outside)	Ball Diamond (Lit)	Ball Diamond (Not Lit)	Gymnasium	Maintenance Garage	Activity Room	Multi-Purpose Room	Parking Facilities	Picnic Area	Play Apparatus	Recreation Center	Fishing Pond	Soccer/Football Field	Tennis Courts (Lit)	Tennis Courts (Not Lit)	Walking Trail (Per Lap)	Outdoor Fitness Station	Splash Pad	Indoor Walking Track/ Fitness Center	Skate Park	Performance Stairs	Total Acreage
#1. Cynthia Neal Center Kasey Meadow Park 8047 W. 91st Pl.	1	1		2		1	1	1	3	1	2	1		2	2		1/2 Mile	1	1		1	1	17.0
#2. Krueger Park 9100 S. 88th Ave.		1		1	1		3		1	1	1	1				2	1/4 Mile			1			10.0
#3. Martin Park 89th Pl. & 78th Ave.			2						3				1	1			1/8 Mile						6.9
#4. Petkiewicz Park 89th St. & 85th Ct.										1	2												1.75
#5. Doug Osborne Park 9400 S. 84th Ct.									1	1	1							1					1.0
#6. Memorial Park 94th St. & 78th Ave.									1	1	1												1.0
#7. Woodland Park Woodland Dr. & Kean Ave.											1												.5
#8. Prairie View Park 82nd Ave. & 85th St.									1	1	1		1				7/8 Mile						4.0
#9. Maintenance Facility 9156 Roberts Rd.						1																	.275